21. November 2019

DALLMER

roof drain type 62 H PVC, heated, DN 100

Product No. **623164**
EAN: 4001636623164
Discount group: 10

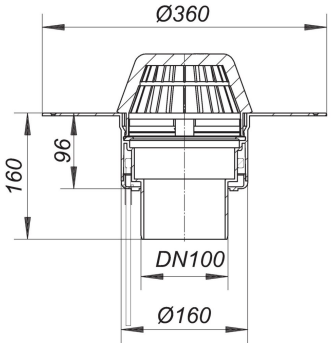

conforming to DIN EN 1253
one-piece drain, moulded in PVC, PVC membranes can be welded to the flanges

specification:
- insulated drain body
- outlet vertical
- domed grate

material:
PVC

H = roof drain heated version
Connect to 230 V supply, conforming to VDE 0721, Part 1/3.78
Power per drain: 15 watts
Current per drain: 0.06 amps
Suggested current per roof area: 16 amps

Product No.	Description	Dimensions
500328	balcony grating GES 15, 200 x 200 mm	200 x 200 mm
500311	balcony grating SEN 15, 150 x 150 mm	150 x 150 mm
500304	balcony grating SES 15, 150 x 150 mm	150 x 150 mm
620996	domed grating/gravel guard S 15, d: 170 mm	d: 170 mm
620934	domed grating/gravel guard type S 15. stainless steel, d: 150 mm	
515148	fire protection kit 9 for steel trapezoidal-profiled roof, DN 90/DN 100	
590183	flat grate S 15, d: 170 mm	d: 170 mm
671394	overflow adaptor 86.1	

Dallmer GmbH + Co KG · Wiebelsheidestraße 25 · 59757 Arnsberg / Germany · Tel.: +49 2932 9616-0 · Fax: +49 2932 9616-222
www.dallmer.de · info@dallmer.de

Subject to modifications due to technical development, errors and misprints.

21. November 2019

DALLMER

590121	perforated collar/gravel guard S 15, d: 170 mm	d: 170 mm
620958	planter drain box, 362 x 362 mm	362 x 362 mm
621580	raising piece type 630 clamp ring	
622587	raising piece type 630 DallBit	
671226	raising piece type 630 FPO-PP	
623584	raising piece type 630 PVC	

Dallmer GmbH + Co KG · Wiebelsheidestraße 25 · 59757 Arnsberg / Germany · Tel.: +49 2932 9616-0 · Fax: +49 2932 9616-222
www.dallmer.de · info@dallmer.de

Subject to modifications due to technical development, errors and misprints.